The information contained in this drawing is the sole property of CWS Coil Winding Specialist.
Any reproduction in part or whole without written permission of CWS Coil Winding Specialist is prohibited.

REVISION HISTORY

REV	ECN	DESCRIPTION	SIGN & DATE BY	DATE	CHK	DATE
B		PRODUCTION RELEASE	TDK	2/07/06	JLAU	2/07/06
C		UPDATED AND ROHS COMPLIANT	RJL	1/28/11	JLAU	1/28/11

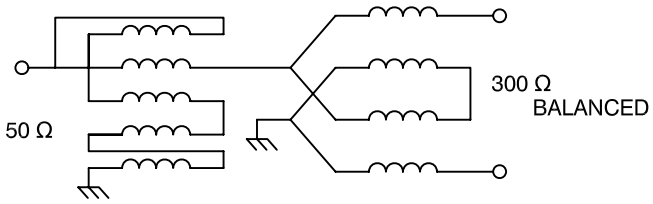

SCHEMATIC

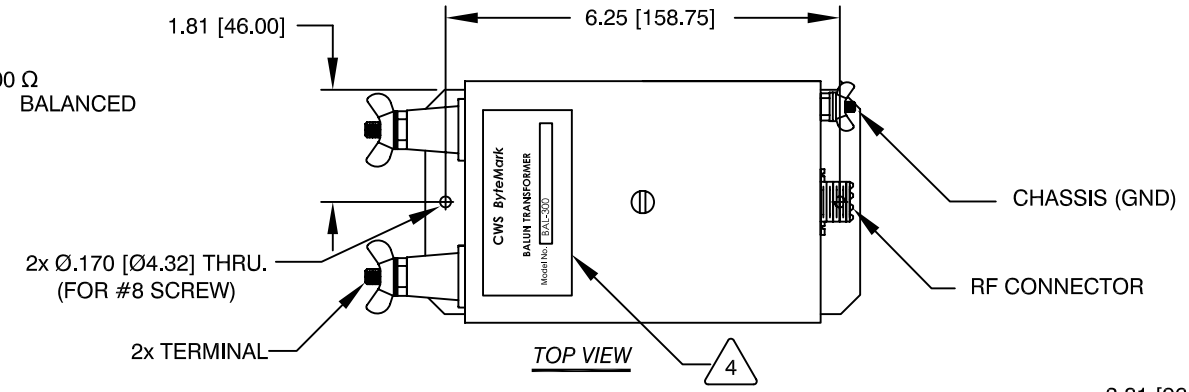

TOP VIEW

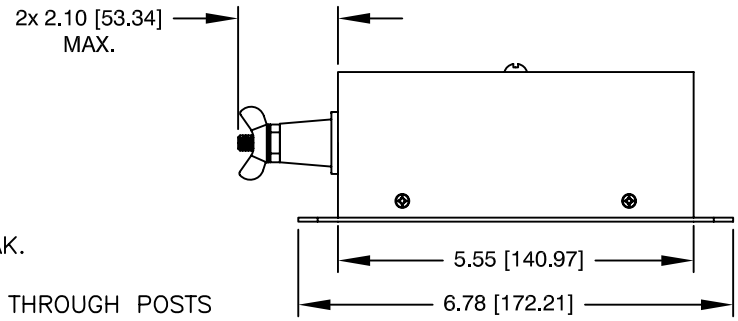

FRONT VIEW

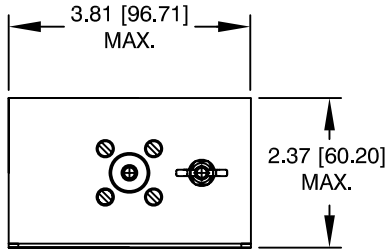

SIDE VIEW

6 BUILT TO ROHS COMPLIANCE

ABOVE GROUND
RIBBON AT 0.22 WAVELENGTH
FOR FOLDED DIPOLE USING 300 Ω

5 APPLICATIONS:

WHERE SHOWN
4 MARK PART NUMBER AND REVISION

EFFICIENCY = 97%
POWER RATING: 1 KW CONTINUOUS, 2 KW PEAK.
FREQUENCY RANGE: 1.0 MHZ TO 50 MHZ
TO BALANCED OUTPUT: 300 Ω, CERAMIC FEED THROUGH POSTS
UNBALANCED CO-AXIAL INPUT: 50 Ω SO239
IMPEDANCE MATCH RATIO: 1:6

3 SPECIFICATIONS:

WIRE: UL RECOGNIZED 200°C RATED MAGNET WIRE
CWS BYTEMARK OR OTHER APPROVED PART

2 CORE: COATED FERRITE TOROID, K MATERIAL

1 MATERIAL: UL RECOGNIZED 94V-0 FOR FLAMMABILITY

NOTES: UNLESS OTHERWISE SPECIFIED, READ TEXT FROM BOTTOM UP.

QTY	CODE IDENT	MFG. P/N	DESCRIPTION	ITEM NO.

PARTS LIST

AUTOCAD	X	
SOLIDWORKS		
SIGN		DATE
DRAWN	TDK	2/07/06
CHECKED	JLAU	2/07/06
ENGR.	KSUM	2/07/06
APPR.	JLAU	2/07/06

UNLESS OTHERWISE SPECIFIED
DIMENSIONING AND TOLERANCE PER ANSI Y14.5M
ALL DIMENSIONS ARE IN INCHES AND [MILIMETERS].
TOLERANCE INCHES: .XXX=±.010 .XX=±.020 ∢=±0°30'
TOLERANCE METRICS: .XXX=±.254 .XX=±.51 ∢=±0°30'
ANGLE PROJECTION
DO NOT SCALE DRAWING

www.coilws.com
sales@coilws.com
CWS Coil Winding Specialist Inc.
353 West Grove Avenue
Orange, CA 92865, USA

TITLE: Transmission Line Transformer
Balun Transformer
50 Ω : 300 Ω

SIZE B | DWG. NO. BAL-300 | REV C

SCALE NOT_TO_SCALE | SHEET 1 OF 1

CAD-FILE: